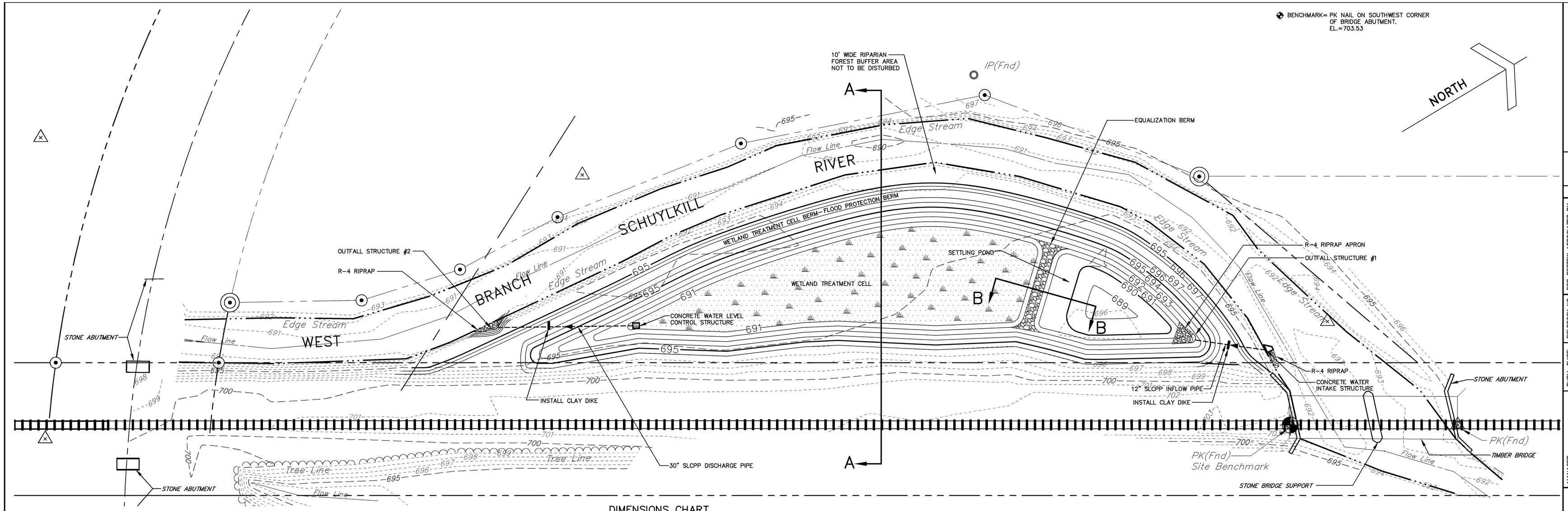

SITE PLAN

SCALE: 1"=30'

DIMENSIONS CHART

OUTLET NO.	PIPE DIAMETER (IN)	APRON		
		LENGTH (FT)	INITIAL WIDTH (FT)	TERMINAL WIDTH (FT)
1	12	10	3	7
2	30	10	7.5	11.5

NOTES:
1. OUTFALL STRUCTURE #1 DISCHARGES WITHIN .25 FEET OF THE NORMAL WATER ELEVATION WITHIN THE SETTLING POND. THE RIP-RAP APRON IS TYPICALLY SUBMERGED.
2. OUTFALL STRUCTURE #2 DISCHARGES AT THE NORMAL WATER ELEVATION OF THE RIVER. THE RIP-RAP APRON IS TYPICALLY SUBMERGED.

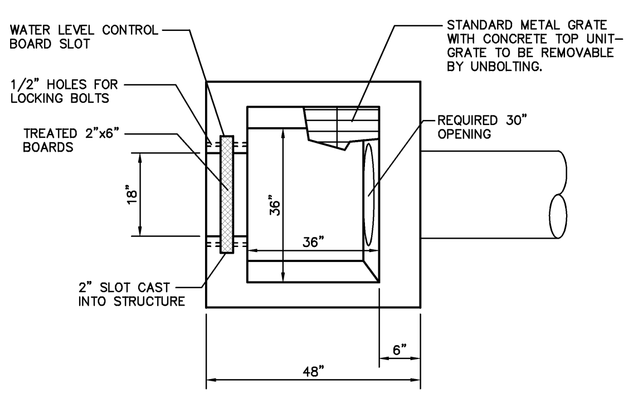

TOP VIEW

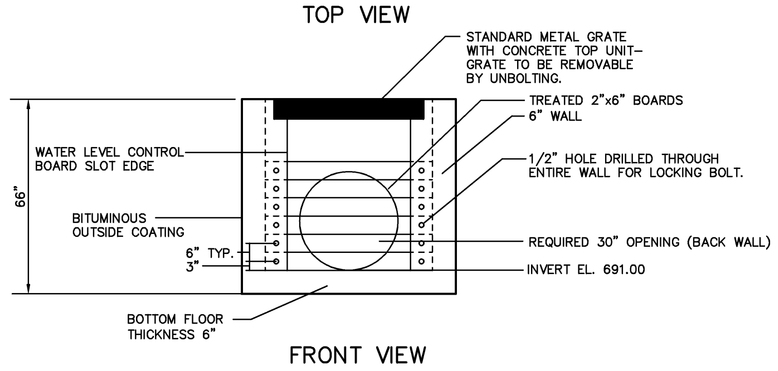

FRONT VIEW

CONCRETE WATER LEVEL CONTROL STRUCTURE

NOT TO SCALE

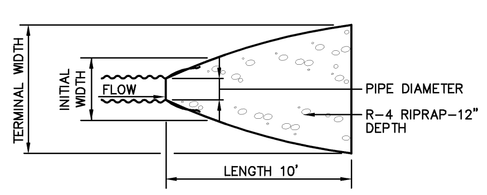

PLAN

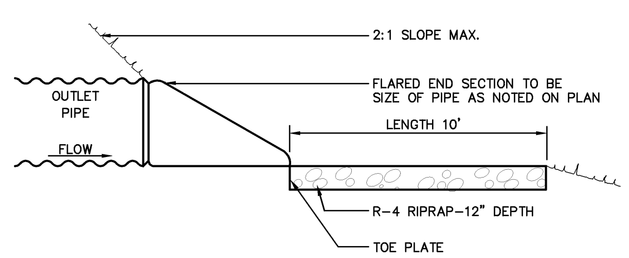

CROSS-SECTION

OUTFALL STRUCTURE (#1 AND #2)

NOT TO SCALE

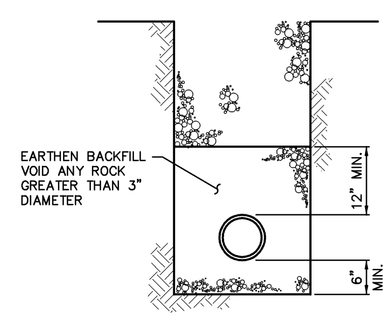

BACKFILL DETAIL FOR INTAKE AND OUTFALL PIPES

NOTE
CLAY DIKE SHALL CONSIST OF CLAY CONTAINING NO MORE THAN 15% (BY VOLUME) STONE NO LARGER THAN TWO (2) INCHES IN DIAMETER. CLAY SHALL BE PLACED IN SIX (6) INCH LIFTS AND COMPACTED BY A MECHANICAL TAMPER TO NOT LESS THAN 95% OF MAXIMUM DENSITY AT OPTIMUM MOISTURE CONTENT.

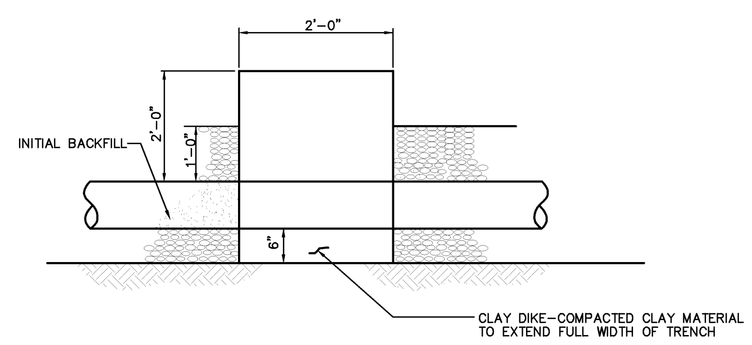

CLAY DIKE DETAIL

NOT TO SCALE

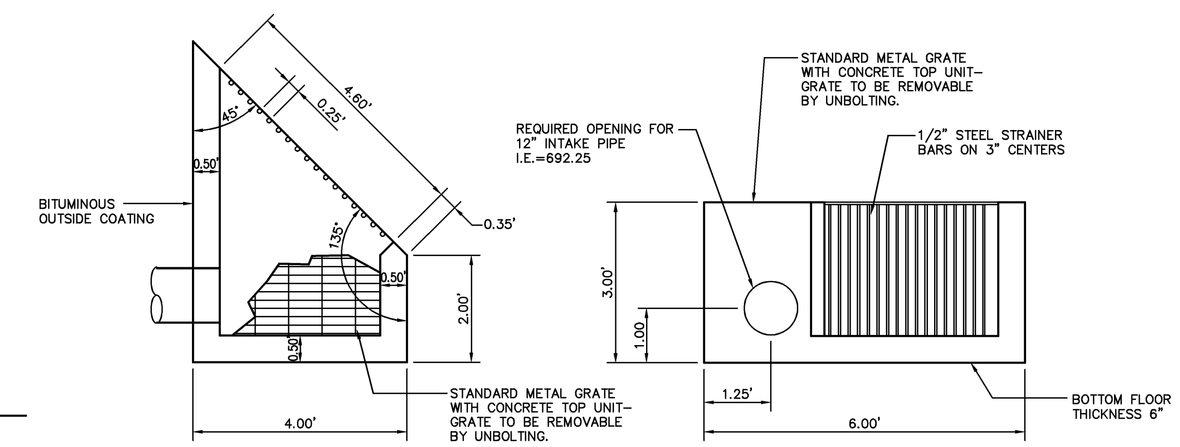

TOP VIEW

FRONT VIEW

NOTE: ALL DIMENSIONS IN FEET UNLESS OTHERWISE SPECIFIED

CONCRETE WATER INTAKE STRUCTURE

NOT TO SCALE

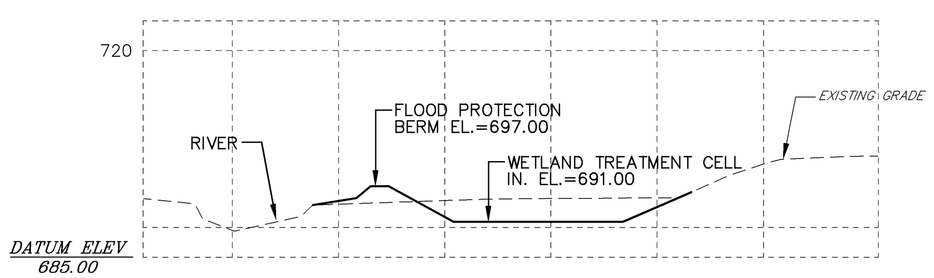

SECTION A-A

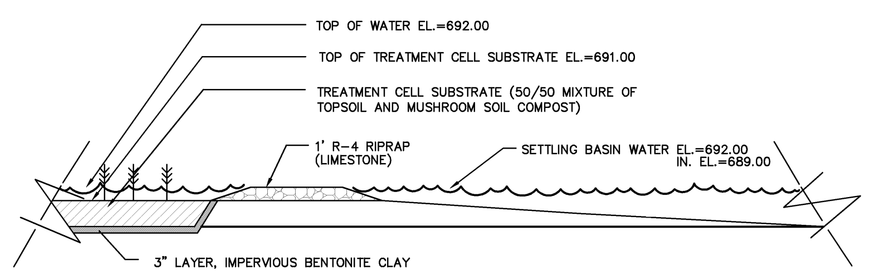

EQUALIZATION BERM SECTION B-B

NOT TO SCALE

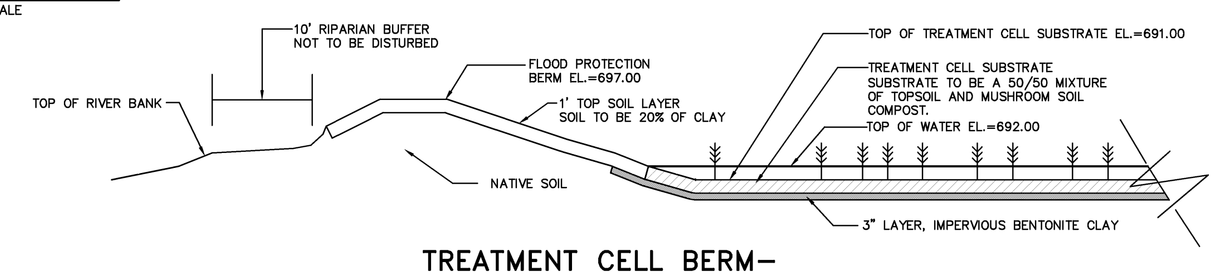

TREATMENT CELL BERM- FLOOD PROTECTION BERM

NOT TO SCALE

NO.	DATE	REVISION

FOR RETTEW ASSOCIATES BY:

FIELDBOOK NO. DATA COLLECTOR | CHKD BY: C.E.B.

SURV. CHIEF: | DRAWN BY: N.W.S.

MANAGER: DANIEL J. BECKER, P.E. | CHKD BY: D.J.B.

DESIGN BY: C. BUBECK | DRAWING REFERENCE: H:\00\004234\1\cadd\Grd-Eng\004234\01Site Plan.dwg

XREFS:

CLIENT
SCHUYLKILL HEADWATERS ASSOCIATION
P.O. BOX 1355
POTTSVILLE, PA 17901
(507) 385-2122

SCALE 1"=30' (0 15 30 60 90)

RETTEW ASSOCIATES, INC.
Union Street Station, 101 East Union Street
Pottsville, PA 17901
Phone (570) 622-8222 · Fax (570) 622-4260
Email: rettew@rettew.com Website: www.rettew.com
Bethlehem, PA · Camp Hill, PA · Lancaster, PA · York, PA
Engineers • Planners • Scientists • Landscape Architects • Surveyors

CONSTRUCTION PLAN
MINERSVILLE WETLAND
FOR
SCHUYLKILL HEADWATERS ASSOCIATION
GRADING/DETAILS

NORWEGIAN TOWNSHIP SCHUYLKILL COUNTY

DATE: 7/30/01

SHEET NO. 2 OF 3

DWG. NO. 004234-01